# 3315-C3 FAG

**SKU:** FAG3315-C3

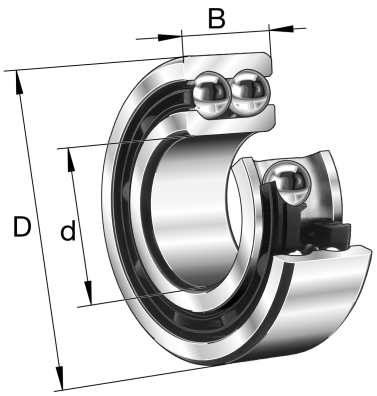


## Extra afbeelding

## Specificaties

| | |
|---|---|
| **bearingLubrication** | Unlubricated |
| **seals** | Open |
| **accuracy** | Normal (PN) |
| **cageMaterial** | Steel |
| **designation** | 3315-C3 |
| **Boring diameter (mm)** | 75 |
| **Buitendiameter (mm)** | 160 |
| **Breedte (mm)** | 68.3 |
| **Eenheden** | pc |
| **Gewicht (kg)** | 6.16 |
| **Omschrijving (EN)** | Angular contact ball bearing 33, double row, with filling slot, steel sheet metal cage |
| **EAN-code** | 4012801196833 |
| **Merk** | FAG |
| **category1** | Angular contact bearings |

| | |
|---|---|
| **endCategory** | Double row angular contact ball bearings |
| **Boring diameter (mm)** | 75 |
| **Buitendiameter (mm)** | 160 |
| **Breedte (mm)** | 68.3 |
| **Gewicht (kg)** | 6.16 |

# Beschrijving

3315-C3 FAG Double row angular contact ball bearings

# Product URL

https://aandrijftechniek.nl/product/3315-c3-fag/